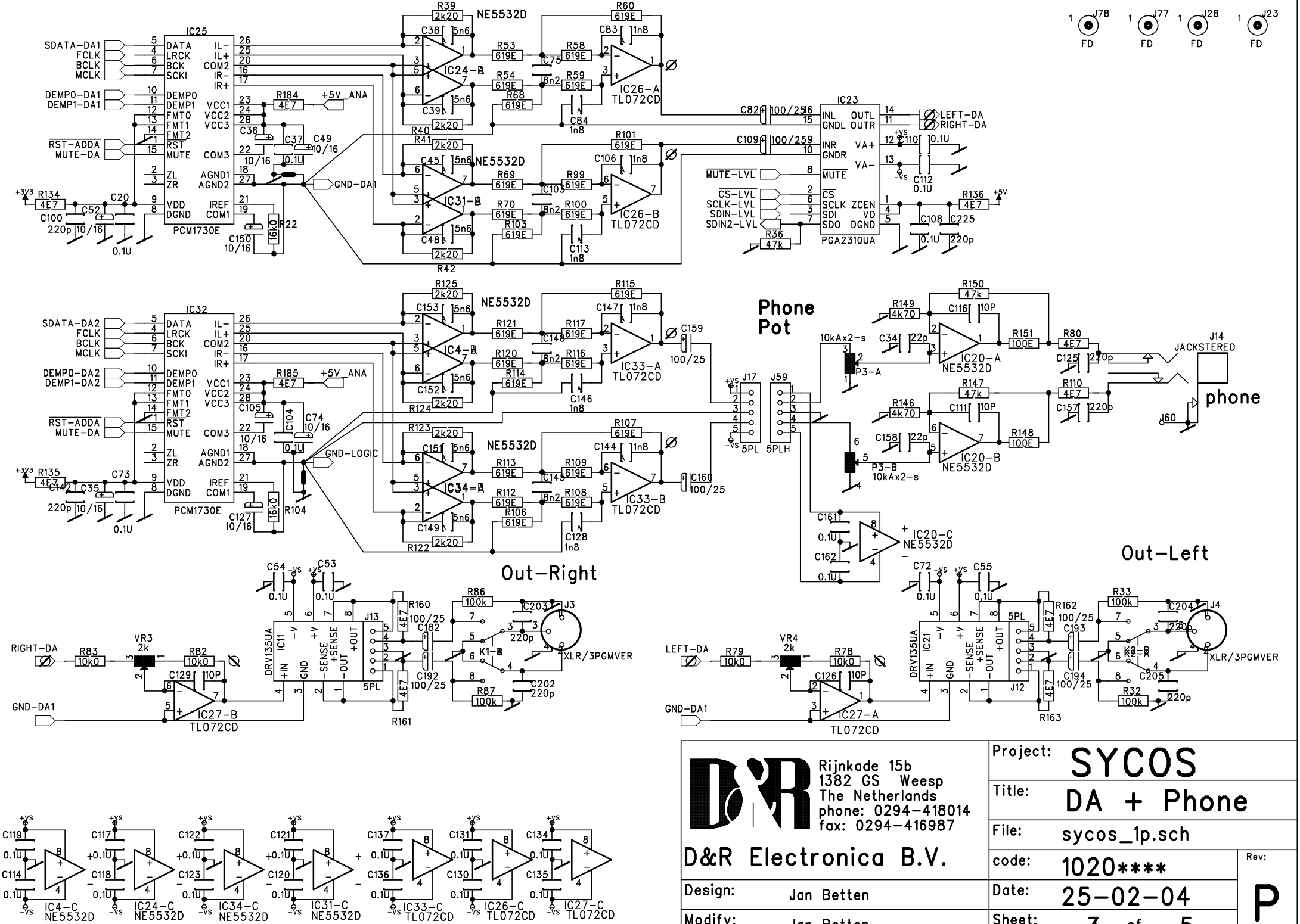

D&R Electronica B.V.

Rijnkade 15b
1382 GS Weesp
The Netherlands
phone: 0294-418014
fax: 0294-416987

Project:	SYCOS
Title:	DA + Phone
File:	sycos_1p.sch
code:	1020****
Date:	25-02-04
Sheet:	3 of 5
Rev:	P
Design:	Jan Betten
Modify:	Jan Betten